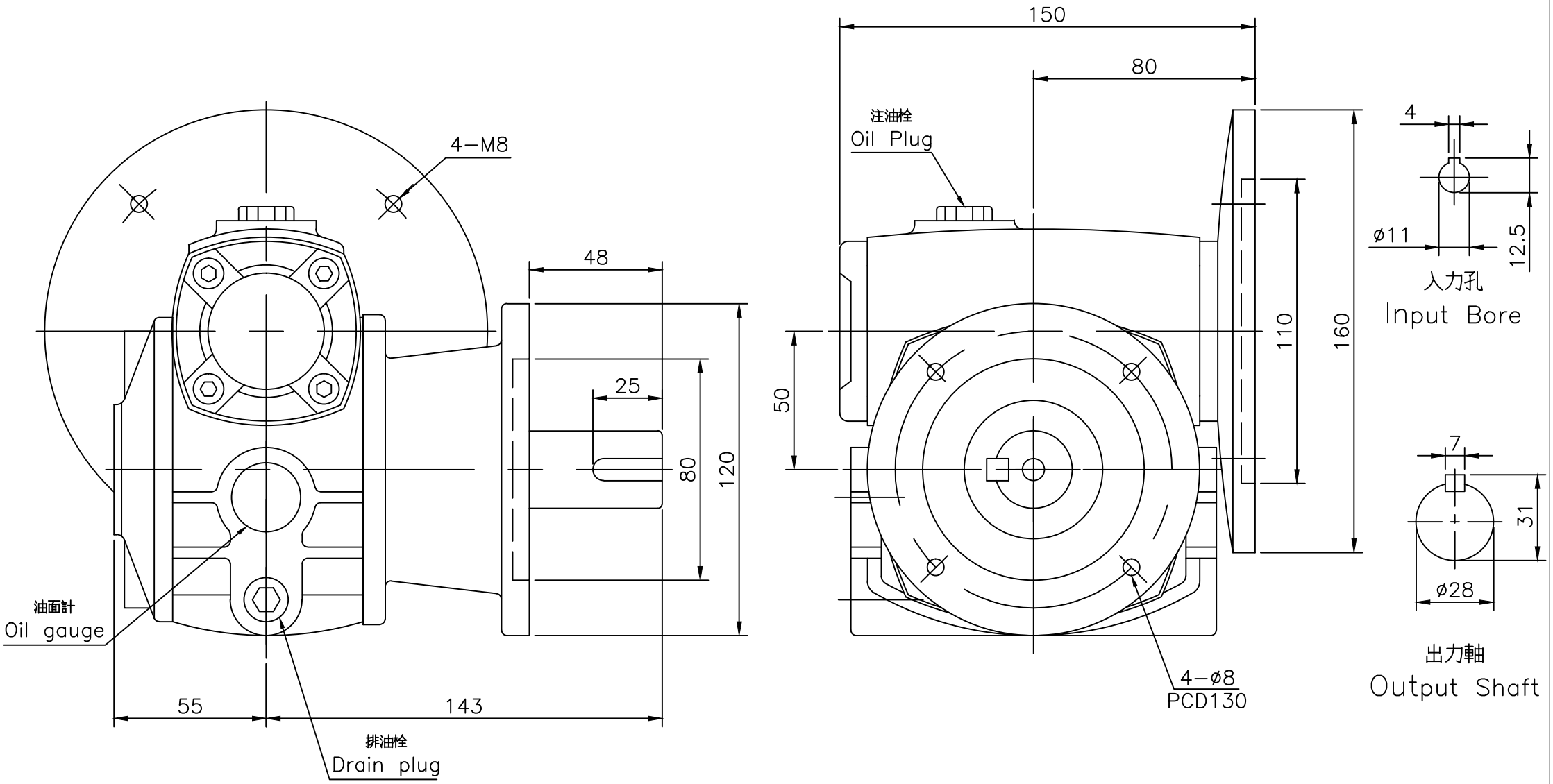

VARITRON® Take Control In Speed	Tel:886-2-29889598		Name	Date				
Varitron Engineering(Taiwan)Co.Ltd	Fax:886-2-29880998	DRAWN	LAWRENCE	2015.5.4	Model Name	Worm Gear Speed Reducers 蝸輪減速機		
	http://www.c-var.com	CHKD	GABRIEL	2015.5.4		Scale	1:1	Unit m/m
		APPROVE	K.LONG	2015.5.4	Model No.	ADW50-02-L		