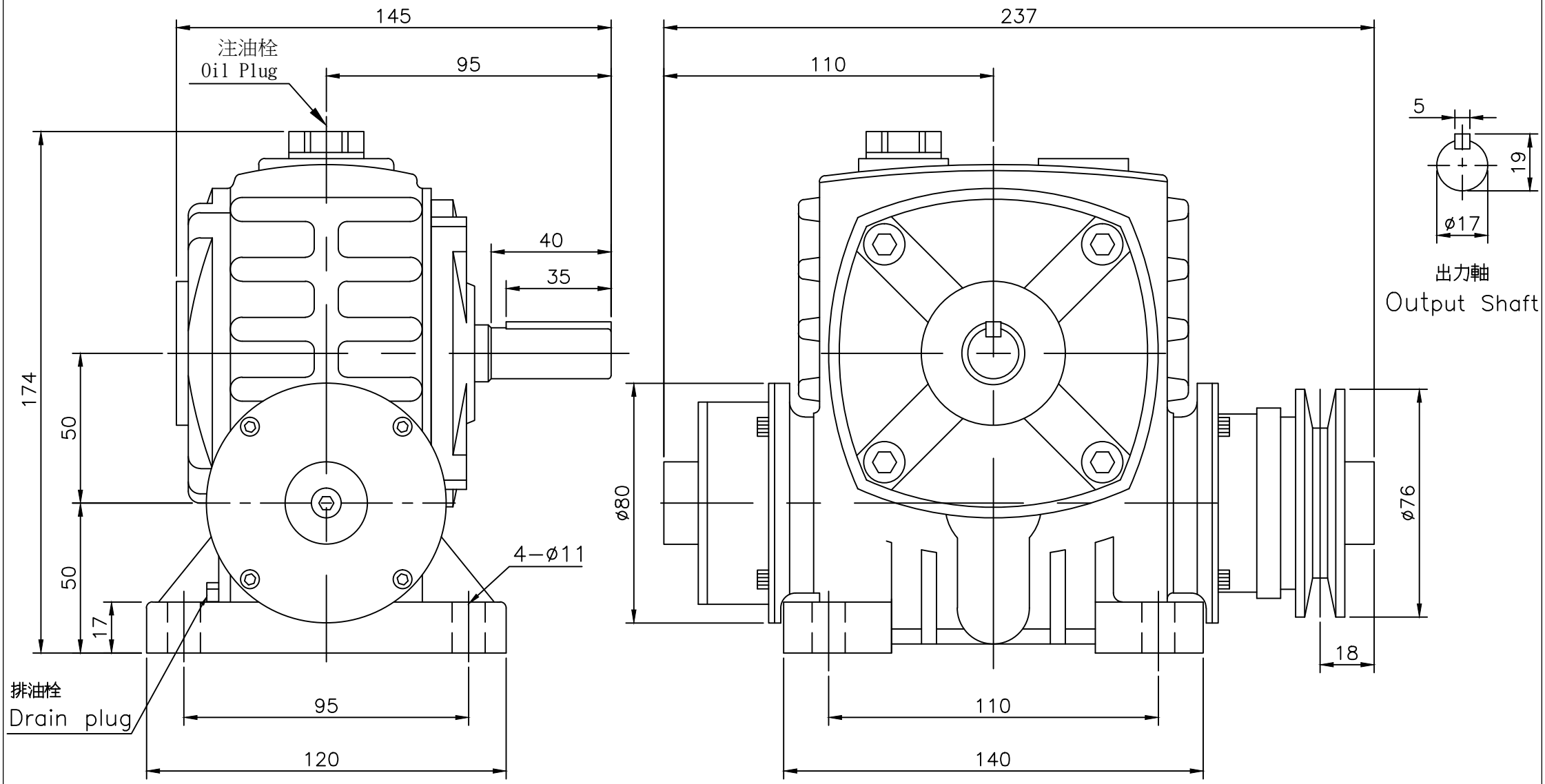

		Name	Date				
	DRAWN	LAWRENCE	2015.5.4	Model Name	Worm Gear Speed Reducers 蝸輪減速機		
	CHKD	GABRIEL	2015.5.4		Scale	1:1	Unit m/m
	APPROVE	K.LONG	2015.5.4	Model No.	LWRC50-L		

VARITRON®
Take Control In Speed
Varitron Engineering(Taiwan)Co.Ltd
Tel:886-2-29889598
Fax:886-2-29880998
http://www.c-var.com